Residence | Health College | Performance Center | Institute

Architectural Woodwork Institute

design solutions

Spring 2020 | $6.25

In 2019, to mark its 50th anniversary, Virginia Commonwealth University (VCU), Richmond, opened its new College of Health Professions building, bringing all 11 units under one roof, from five different buildings across two campuses, and enabling students and faculty to collaborate in ways that have not been previously possible. This state-of-the-art facility is eight levels, 154,000 square feet, features classrooms, study areas, auditorium, patio, "smart apartment," and an anesthesia simulation suite.

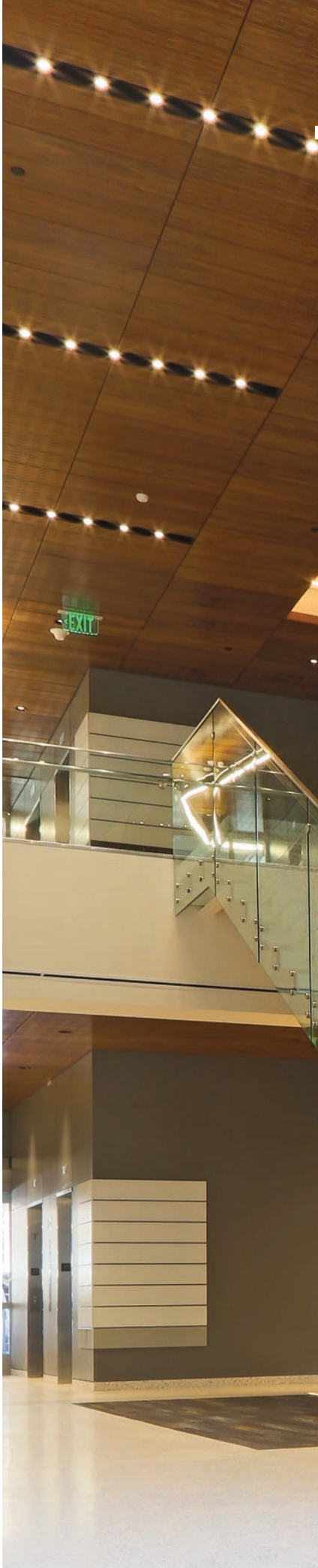

Welcoming Wall.

University's School of Health Creates an Inviting Look with Walnut Feature Wall.

The new building is LEED Silver Certified and offers exceptional interdisciplinary research and scholarship experiences while significantly improving efforts to attract and recruit the best and brightest students and faculty. It is designed to be a visible reflection of the college's and VCU's commitment to preparing students to be the very best in their chosen fields.

The tone of the new building is to feel like a campus with modern and inviting spaces designed to connect faculty, staff and students. The 160-seat, glass-front auditorium is available to all departments in the college, and classrooms are furnished to maximize flexibility and accommodate various teaching styles and methods, including two-way synchronous video conferencing for distance learning.

The design process for the new $60 million VCU School of Health Professions began in August of 2015 and construction was completed by March of 2019. Design was completed by EYP Architecture and Engineering, Washington, DC. Architectural woodwork for the project was fabricated by Stephenson Millwork, an AWI firm located in Wilson, North Carolina.

Design Process

The new VCU College of Health Professions building sits at the intersection of the school's long, storied history as one of America's earliest medical schools and its trailblazing collaborative pedagogical model, notes Brent Castro of EYP Architecture and Engineering. "We designed the facility with the intention of unifying the college's 11 disparate disciplines into one space. The site for this new integrative academic program is located only a few blocks away from the Virginia State Capitol and Richmond's downtown district on VCU's leafy and historic Medical Campus. Both the College of Health Professions and EYP knew it would be important to celebrate the university's past and its future through the new building's design."

Customized woodwork, including a Walnut fin feature wall and Walnut veneer and upholstered benches, is utilized extensively throughout as a unifying and collaborative architectural element in keeping with the university's mission and values. Walnut, with its timeless, dark, and warm finish was chosen as the material of choice, reports Castro. "The wood is endemic to Virginia and offered an exciting contrast to the white speckled terrazzo flooring."

WALNUT

at a glance

AWI MANUFACTURING MEMBER:

Stephenson Millwork

LOCATION:

Wilson and Raleigh, North Carolina

ESTABLISHED:

1946

FACILITY:

100,000 square feet

Licensed QCP Manufacturer

Further emphasizing the unification of the college's 11 schools, custom millwork and paneling are present in the interdisciplinary auditorium as well as community tabletops and group study alcoves across the building's eight floors. "All of these elements emphasize the importance of a collaborative and supportive approach across medical specialties, something that is increasingly important in contemporary healthcare practice as integrated treatment strategies have been shown to increase patients' health outcomes. In this way customized woodwork plays a crucial aesthetic and programmatic function for the profession's educators and future practitioners," adds Castro.

Fin Feature Wall

The spacious lobby presents the Health Professions feature wall, a double-height element comprised of diagonal and vertical Walnut slats. The feature wall abstracts the interlocking chevron pattern found on the building's column bases and capitals, recalling the historic roots of the college in its newest building. Working with the lobby's extensive glass façade, the feature wall connects users with the adjacent wooded plaza and landscape outside.

The feature wall took inspiration from the Egyptian Building, a U.S. National Register of Historic Places landmark built in the 19th-century Neo-Egyptian Revival style. Reflecting VCU's trailblazing mission, the Egyptian Building was the South's first medical college building, surviving the Civil War and serving as an early icon for the university.

The Walnut fin feature wall is made from fire rated MDF backing sheets painted flat black and fins are quarter sawn Walnut veneer over fire rated particleboard core stained to match the architect-provided sample, says Adam Harris, project manager at Stephenson Millwork.

"We provided all engineering regarding panel sizes and shapes for fit into the overall design, and also worked out technical details regarding fit of fins around protrusions like the supports for the stairs and intersections at floor and ceiling. Shop drawings and mockups were supplied to assist in determination of many details including fin alignment, seam locations, construction methods and final color selections."

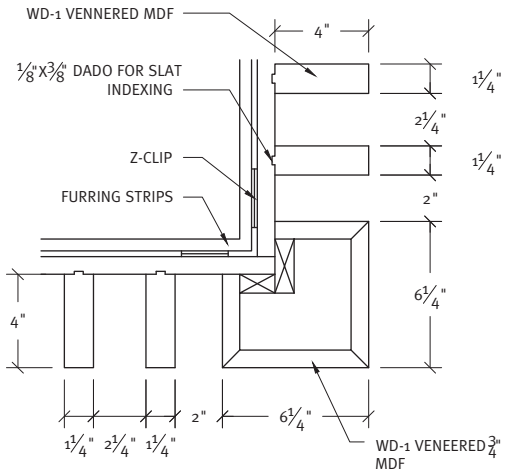

DETAIL @ CORNER TRIM

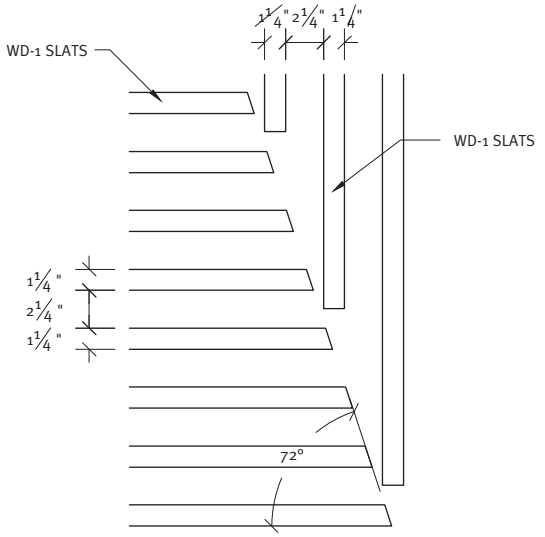

DETAIL @ SLAT LAYOUT PATTERN CONFLICT

> Our company truly has some of the most experienced workers in the industry, and with a family-owned and -operated model, you can be sure our business values and commitment to quality and reliability remain intact.

– Russ Stephenson, Owner

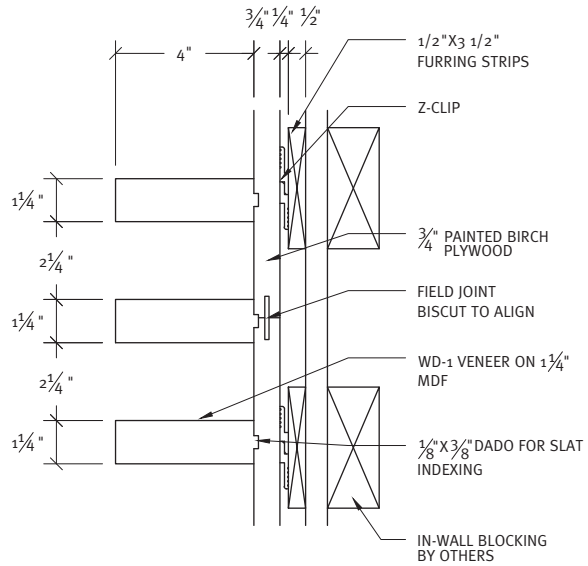

SECTION @ SLAT WALL

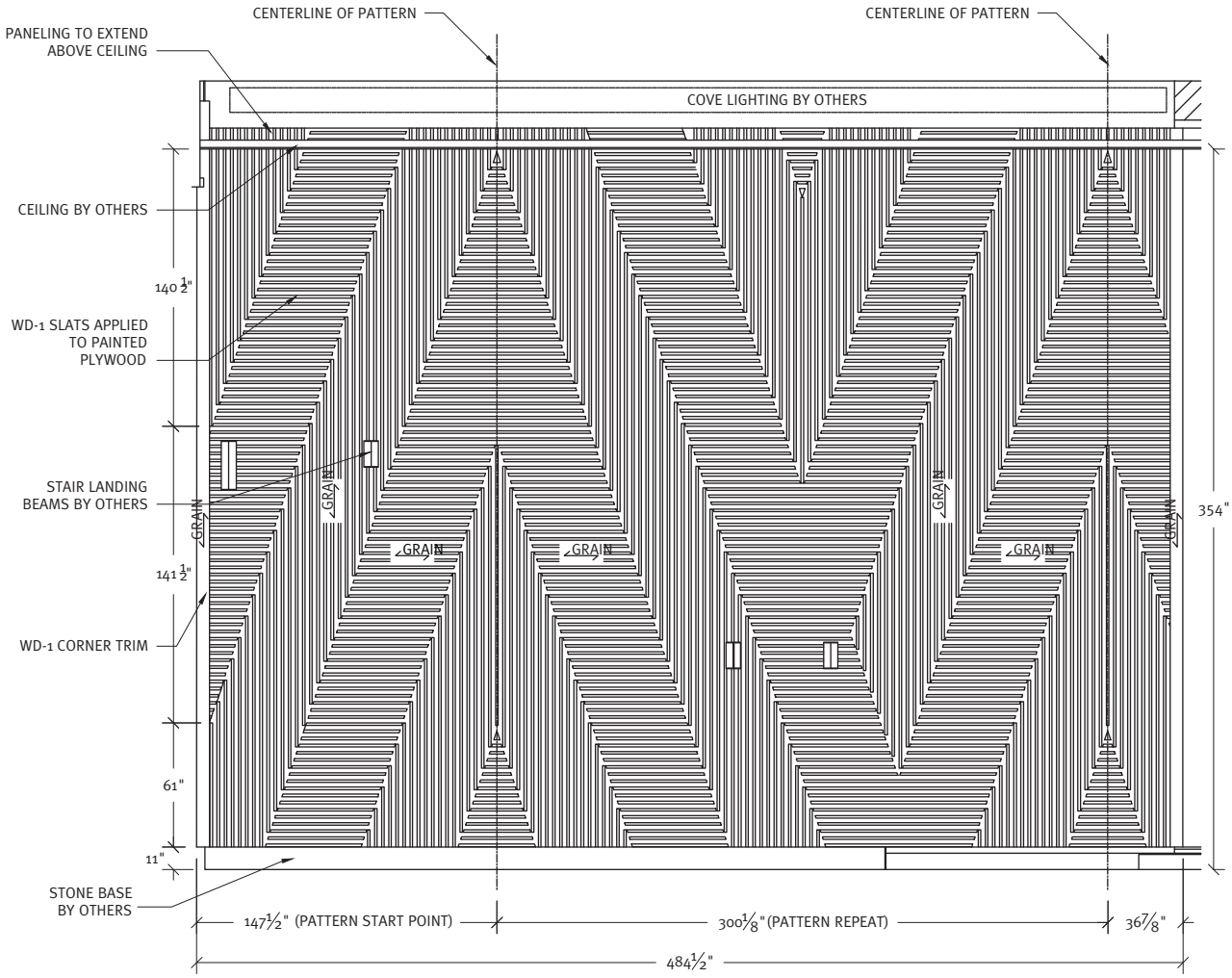

ELEVATION @ FEATURE WALL

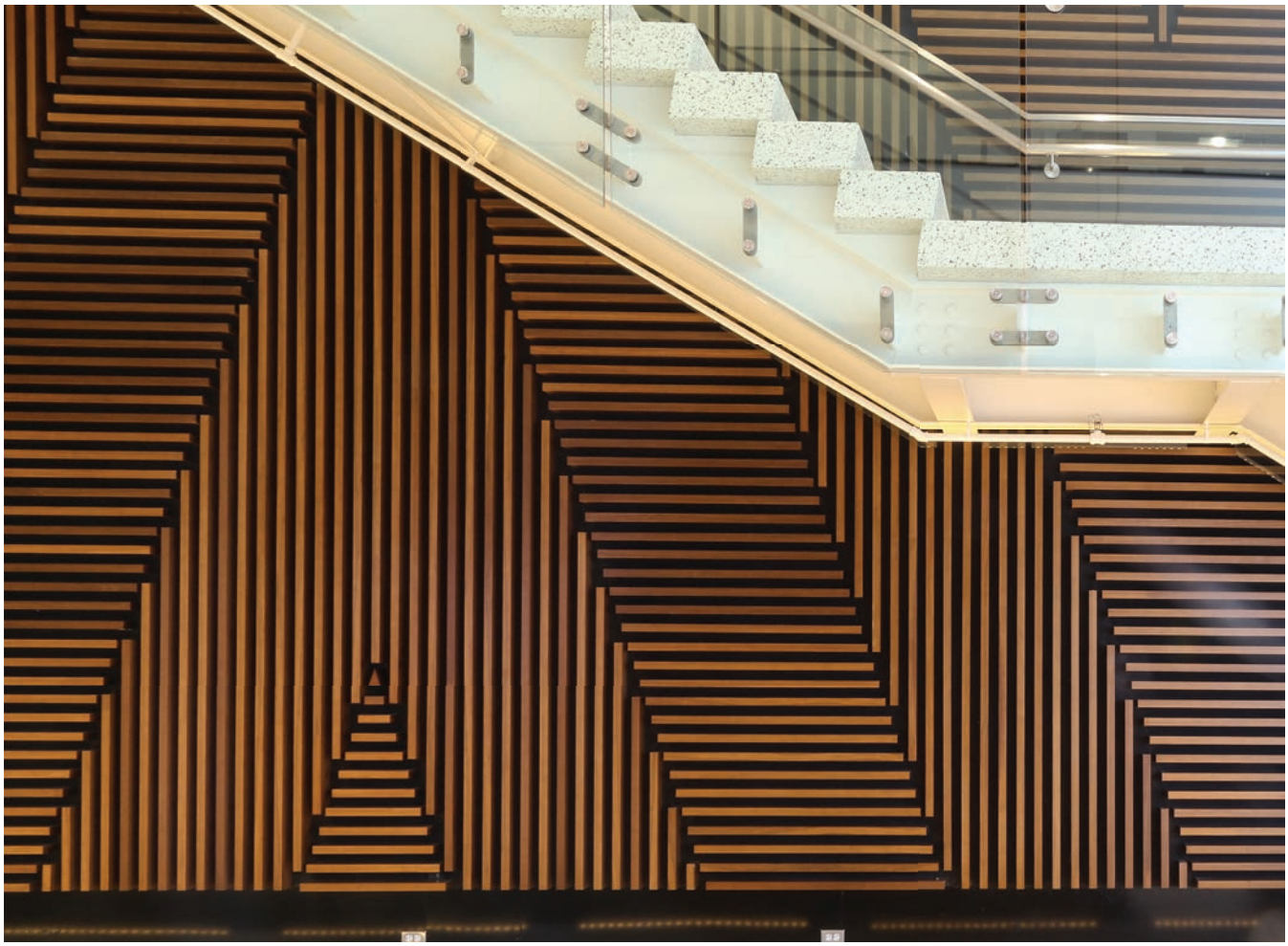

Harris continues, the fin feature wall is the most noteworthy part of the project. "It is prominently featured extending approximately 40' wide across the main lobby north wall and 28' tall from the first floor to the second floor ceiling. The wall is visible from the elevator lobbies on the second and first floors and provides an eye-catching backdrop to the 'floating' stone and glass stair. The wall is made up of individual panels that acted like puzzle pieces coming together to create the overall designs of the vertical and horizontal fins."

Each panel was designed to fit neatly with the surrounding panels while limiting joints and allowing for weight restrictions so that installers could physically move the panels into place from snorkel lifts. Two lifts were utilized to move each panel and secure it into place. After assembly at Stephenson's plant the panels were carefully wrapped in foam in groups, then shipped 140 miles away to the job site. On site the panels were installed in sequence to allow the panels to fit properly and stack onto one another.

The Work

"Thanks in large part to the experience of Stephenson Millwork, the feature wall and other custom millwork pieces faced few issues with the manufacture and installation process," notes Castro. "Through open communication, EYP and Stephenson Millwork worked together to identify any issues with the millwork before fabrication began. Stephenson's extensive background in custom woodwork proved exceptionally valuable in creating a high-quality feature wall with no defects."

"We worked as teammates with the design team providing options for materials and finishes as well proposing details through the shop drawings, submittals, meetings and mockups," says Harris.

PROJECT:
School of Health Professions
Richmond, VA

PROJECT OWNER:
Virginia Commonwealth University
Richmond, VA

WOODWORKER:
Stephenson Millwork
Wilson, NC

ARCHITECT:
EYP Architecture and Engineering
Washington, DC

GENERAL CONTRACTOR:
Whiting-Turner Contracting Company
Baltimore, MD

PHOTOGRAPHER:
Tom Stiles
Mechanicsburg, VA